TDA2030A

18W Hi-Fi AMPLIFIER AND 35W DRIVER

DESCRIPTION

The TDA2030A is a monolithic IC in Pentawatt ® package intended for use as low frequency class AB amplifier.

With $V_{S\ max}$ = 44V it is particularly suited for more reliable applications without regulated supply and for 35W driver circuits using low-cost complementary pairs.

The TDA2030A provides high output current and has very low harmonic and cross-over distortion.

Further the device incorporates a short circuit protection system comprising an arrangement for automatically limiting the dissipated power so as to keep the working point of the output transistors within their safe operating area. A conventional thermal shut-down system is also included.

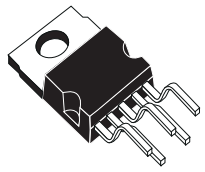

PENTAWATT

ORDERING NUMBERS : TDA2030AH
TDA2030AV

TYPICAL APPLICATION

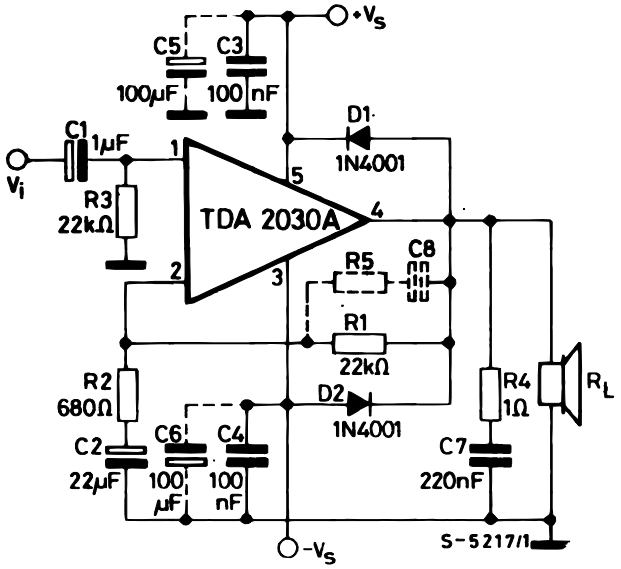

PIN CONNECTION (Top view)

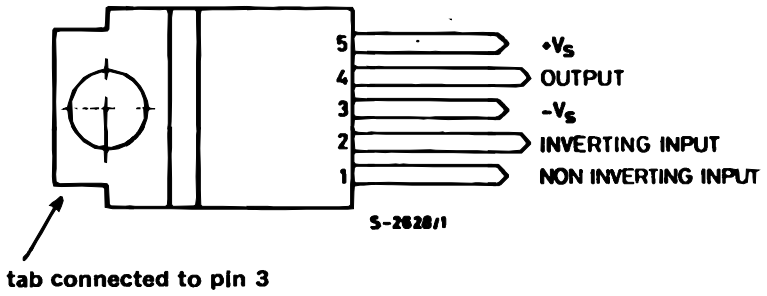

TEST CIRCUIT

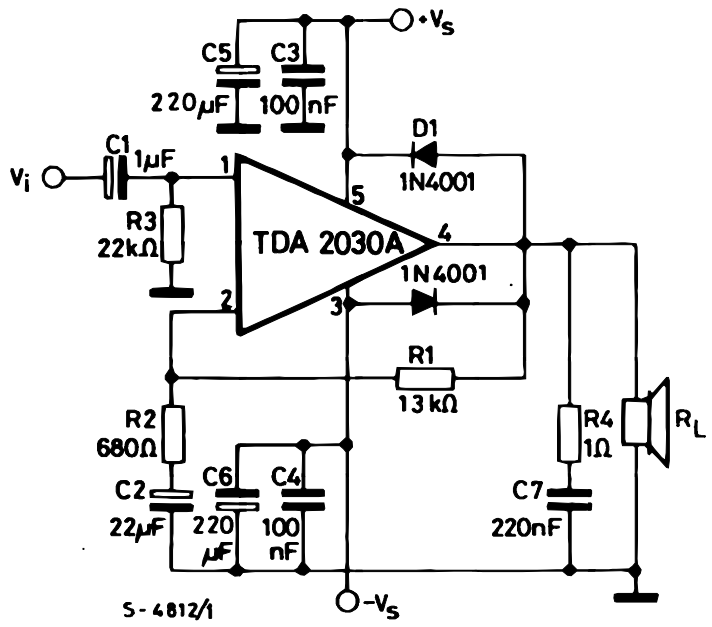

THERMAL DATA

Symbol	Parameter		Value	Unit
$R_{th\ (j\text{-}case)}$	Thermal Resistance Junction-case	Max	3	°C/W

ABSOLUTE MAXIMUM RATINGS

Symbol	Parameter	Value	Unit
V_s	Supply Voltage	± 22	V
V_i	Input Voltage	V_s	
V_i	Differential Input Voltage	± 15	V
I_o	Peak Output Current (internally limited)	3.5	A
P_{tot}	Total Power Dissipation at T_{case} = 90 °C	20	W
T_{stg}, T_j	Storage and Junction Temperature	– 40 to + 150	°C

ELECTRICAL CHARACTERISTICS

(Refer to the test circuit, V_S = ± 16V, T_{amb} = 25°C unless otherwise specified)

Symbol	Parameter	Test Conditions	Min.	Typ.	Max.	Unit
V_s	Supply Voltage		± 6		± 22	V
I_d	Quiescent Drain Current			50	80	mA
I_b	Input Bias Current	V_S = ± 22V		0.2	2	µA
V_{os}	Input Offset Voltage	V_S = ± 22V		± 2	± 20	mV
I_{os}	Input Offset Current			± 20	± 200	nA
P_O	Output Power	d = 0.5%, G_v = 26dB f = 40 to 15000Hz R_L = 4Ω R_L = 8Ω V_S = ± 19V R_L = 8Ω	 15 10 13	 18 12 16		W
BW	Power Bandwidth	P_o = 15W R_L = 4Ω		100		kHz
SR	Slew Rate			8		V/µsec
G_v	Open Loop Voltage Gain	f = 1kHz		80		dB
G_v	Closed Loop Voltage Gain	f = 1kHz	25.5	26	26.5	dB
d	Total Harmonic Distortion	P_o = 0.1 to 14W R_L = 4Ω f = 40 to 15 000Hz f = 1kHz P_o = 0.1 to 9W, f = 40 to 15 000Hz R_L = 8Ω		0.08 0.03 0.5		% % %
d_2	Second Order CCIF Intermodulation Distortion	P_O = 4W, $f_2 – f_1$ = 1kHz, R_L = 4Ω		0.03		%
d_3	Third Order CCIF Intermodulation Distortion	f_1 = 14kHz, f_2 = 15kHz $2f_1 – f_2$ = 13kHz		0.08		%
e_N	Input Noise Voltage	B = Curve A B = 22Hz to 22kHz		2 3	 10	µV µV
i_N	Input Noise Current	B = Curve A B = 22Hz to 22kHz		50 80	 200	pA pA
S/N	Signal to Noise Ratio	R_L = 4Ω, R_g = 10kΩ, B = Curve A P_O = 15W P_O = 1W		 106 94		 dB dB
R_i	Input Resistance (pin 1)	(open loop) f = 1kHz	0.5	5		MΩ
SVR	Supply Voltage Rejection	R_L = 4Ω, R_g = 22kΩ G_v = 26dB, f = 100 Hz		54		dB
T_j	Thermal Shut-down Junction Temperature			145		°C

Figure 1 : Single Supply Amplifier

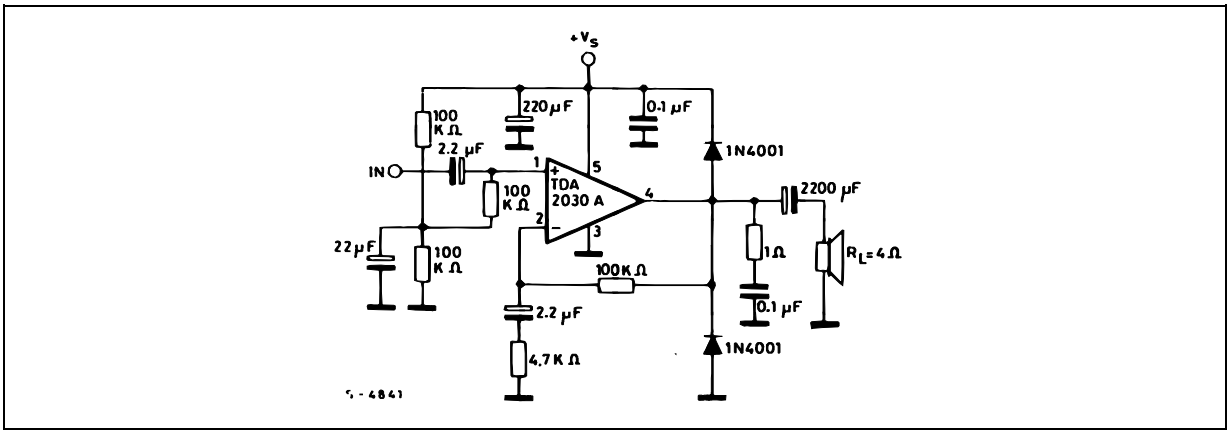

Figure 2 : Open Loop-frequency Response

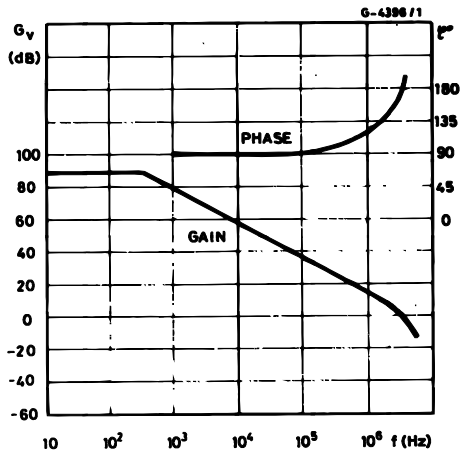

Figure 3 : Output Power versus Supply Voltage

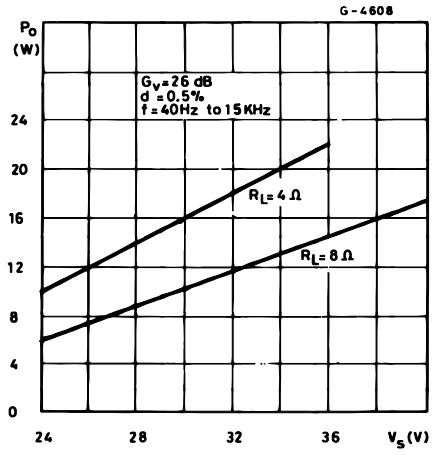

Figure 4 : Total Harmonic Distortion versus Output Power (test using rise filters)

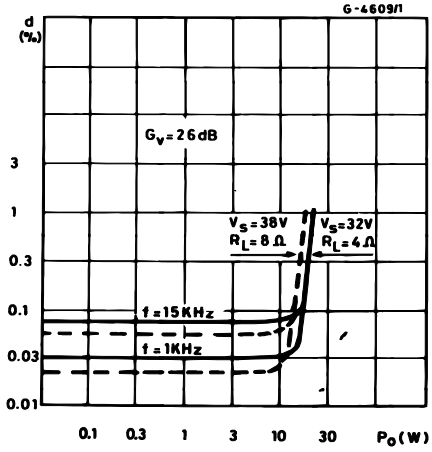

Figure 5 : Two Tone CCIF Intremodulation Distortion

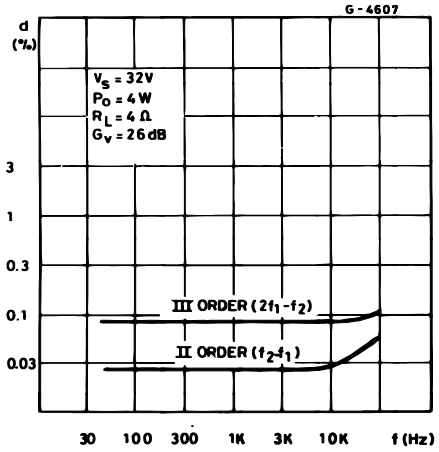

Figure 6 : Large Signal Frequency Response

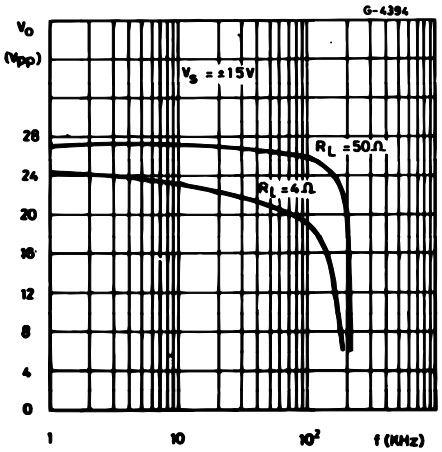

Figure 7 : Maximum Allowable Power Dissipation versus Ambient Temperature

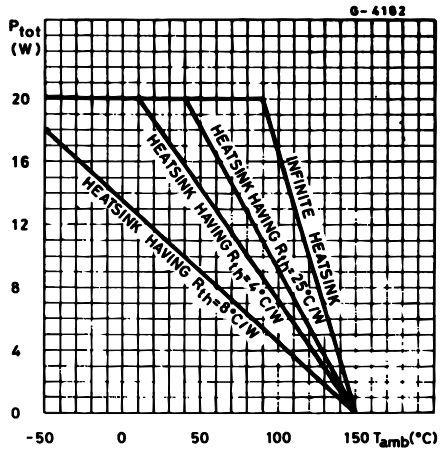

Figure 8 : Output Power versus Supply Voltage

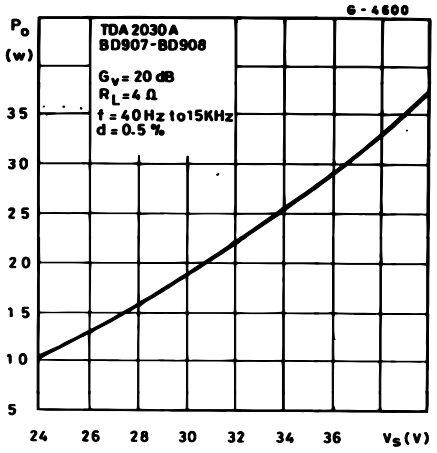

Figure 9 : Total Harmonic Distortion versus Output Power

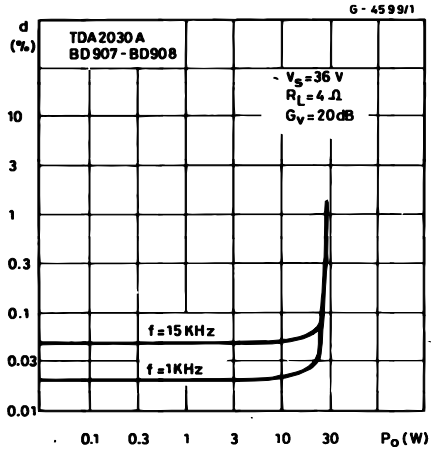

Figure 10 : Output Power versus Input Level

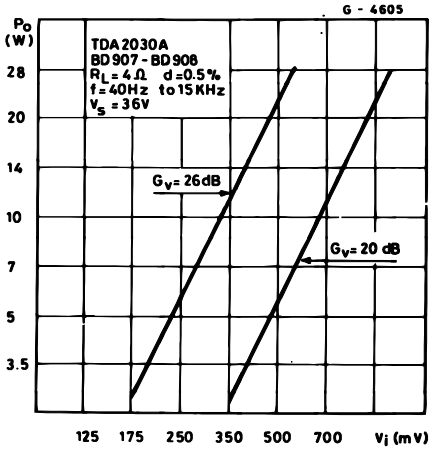

Figure 11 : Power Dissipation versus Output Power

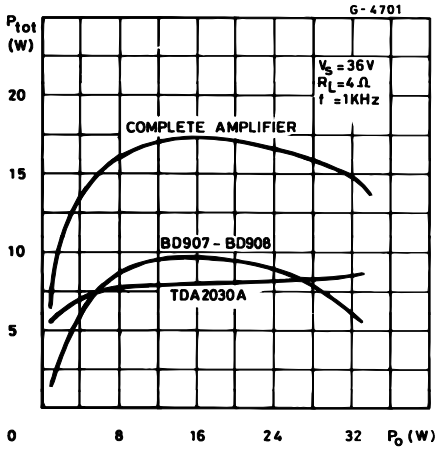

Figure 12 : Single Supply High Power Amplifier (TDA2030A + BD907/BD908)

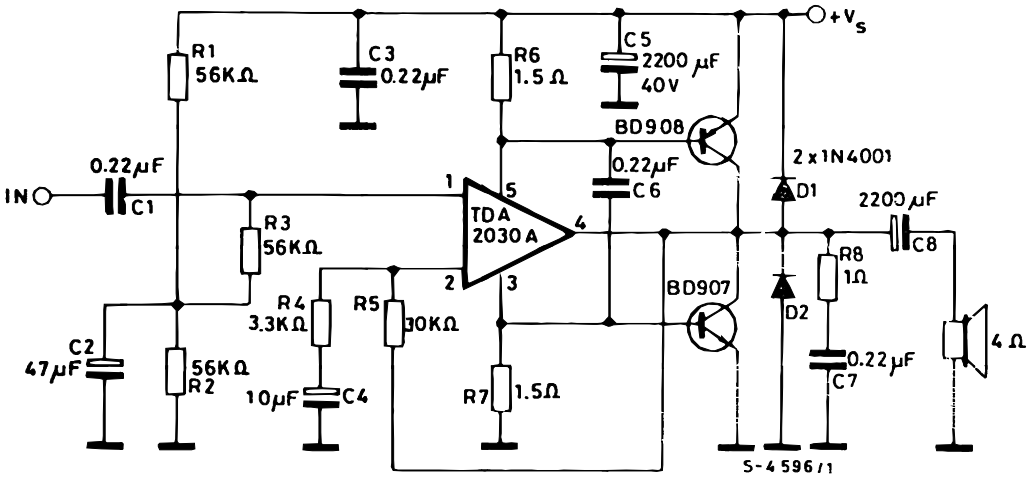

Figure 13 : P.C. Board and Component Layout for the Circuit of Figure 12 (1:1 scale)

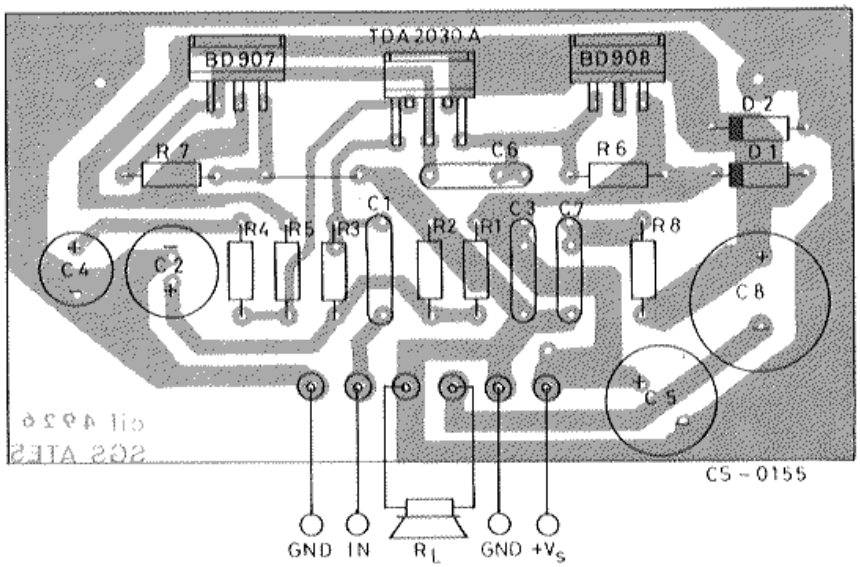

TYPICAL PERFORMANCE OF THE CIRCUIT OF FIGURE 12

Symbol	Parameter	Test Conditions	Min.	Typ.	Max.	Unit
V_s	Supply Voltage			36	44	V
I_d	Quiescent Drain Current	V_s = 36V		50		mA
P_o	Output Power	d = 0.5%, R_L = 4Ω, f = 40 z to 15Hz V_s = 39V V_s = 36V d = 10%, R_L = 4Ω, f = 1kHz V_s = 39V V_s = 36V		 35 28 44 35		 W W W W
G_v	Voltage Gain	f = 1kHz	19.5	20	20.5	dB
SR	Slew Rate			8		V/µsec
d	Total Harmonic Distortion	f = 1kHz P_o = 20W f = 40Hz to 15kHz		0.02 0.05		% %
V_i	Input Sensitivity	G_v = 20dB, f = 1kHz, P_o = 20W, R_L = 4Ω		890		mV
S/N	Signal to Noise Ratio	R_L = 4Ω, R_g = 10kΩ, B = Curve A P_o = 25W P_o = 4W		 108 100		dB

Figure 14 : Typical Amplifier with Spilt Power Supply

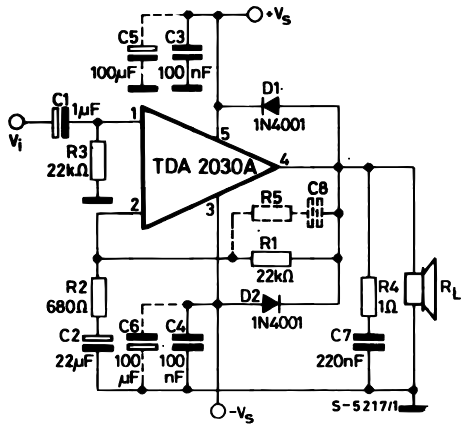

Figure 15 : P.C. Board and Component Layout for the Circuit of Figure 14 (1:1 scale)

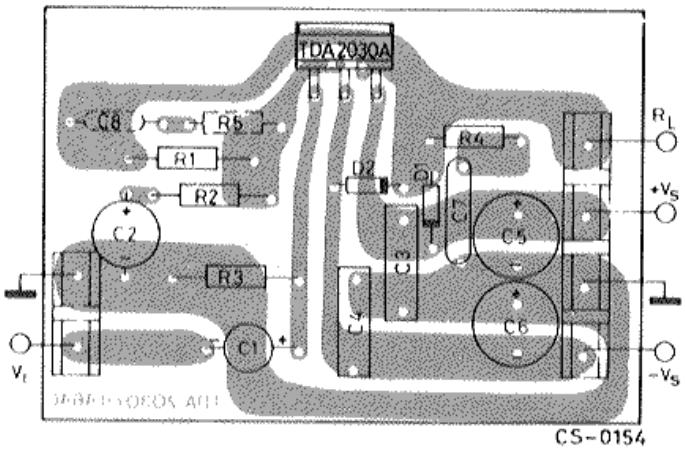

Figure 16 : Bridge Amplifier with Split Power Supply (P_O = 34W, V_S = ± 16V)

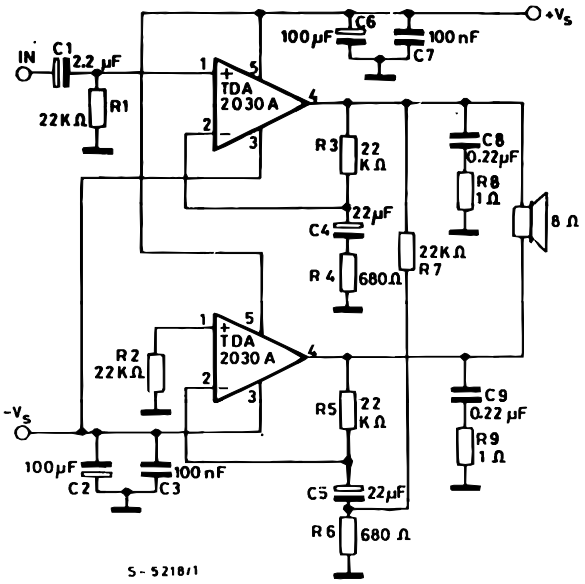

Figure 17 : P.C. Board and Component Layout for the Circuit of Figure 16 (1:1 scale)

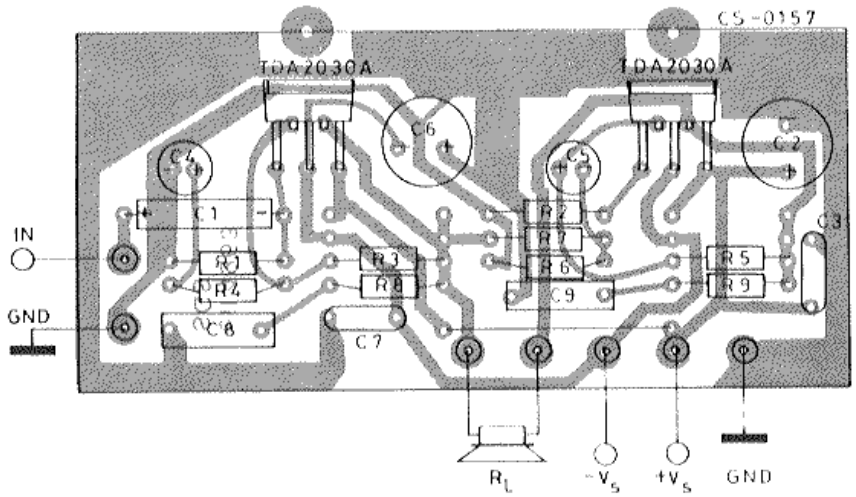

MULTIWAY SPEAKER SYSTEMS AND ACTIVE BOXES

Multiway loudspeaker systems provide the best possible acoustic performance since each loudspeaker is specially designed and optimized to handle a limited range of frequencies. Commonly, these loudspeaker systems divide the audio spectrum into two or three bands.

To maintain a flat frequency response over the Hi-Fi audio range the bands covered by each loudspeaker must overlap slightly. Imbalance between the loudspeakers produces unacceptable results therefore it is important to ensure that each unit generates the correct amount of acoustic energy for its segmento of the audio spectrum. In this respect it is also important to know the energy distribution of the music spectrum to determine the cutoff frequencies of the crossover filters (see Figure 18). As an example a 100W three-way system with crossover frequencies of 400Hz and 3kHz would require 50W for the woofer, 35W for the midrange unit and 15W for the tweeter.

Figure 18 : Power Distribution versus Frequency

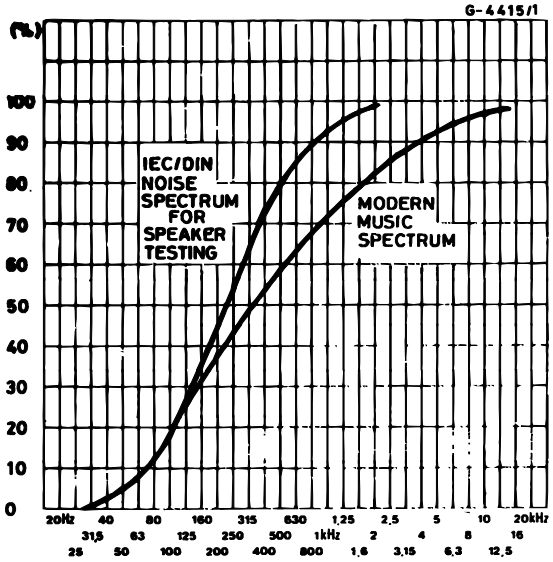

Both active and passive filters can be used for crossovers but today active filters cost significantly less than a good passive filter using air cored inductors and non-electrolytic capacitors. In addition, active filters do not suffer from the typical defects of passive filters:

- power less
- increased impedance seen by the loudspeaker (lower damping)
- difficulty of precise design due to variable loudspeaker impedance.

Obviously, active crossovers can only be used if a power amplifier is provided for each drive unit. This makes it particularly interesting and economically sound to use monolithic power amplifiers.

In some applications, complex filters are not really necessary and simple RC low-pass and high-pass networks (6dB/octave) can be recommended.

The result obtained are excellent because this is the best type of audio filter and the only one free from phase and transient distortion.

The rather poor out of band attenuation of single RC filters means that the loudspeaker must operate linearly well beyond the crossover frequency to avoid distortion.

A more effective solution, named "Active Power Filter" by SGS-THOMSON is shown in Figure 19.

Figure 19 : Active Power Filter

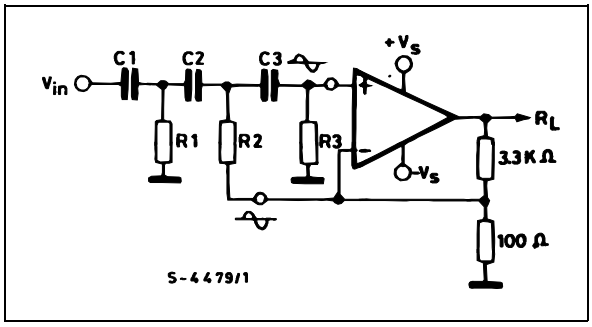

The proposed circuit can realize combined power amplifiers and 12dB/octave or 18dB/octave high-pass or low-pass filters.

In practice, at the input pins of the amplifier two equal and in-phase voltages are available, as required for the active filter operation.

The impedance at the pin (-) is of the order of 100Ω, while that of the pin (+) is very high, which is also what was wanted.

The component values calculated for f_c = 900Hz using a Bessek 3rd order Sallen and Key structure are :

$C_1 = C_2 = C_3$	R_1	R_2	R_3
22nF	8.2kΩ	5.6kΩ	33kΩ

Using this type of crossover filter, a complete 3-way 60W active loudspeaker system is shown in Figure 20.

It employs 2nd order Buttherworth filters with the crossover frequencies equal to 300Hz and 3kHz.
The midrange section consists of two filters, a high pass circuit followed by a low pass network. With V_S = 36V the output power delivered to the woofer is 25W at d = 0.06% (30W at d = 0.5%).

The power delivered to the midrange and the tweeter can be optimized in the design phase taking in account the loudspeaker efficiency and impedance (R_L = 4Ω to 8Ω).

It is quite common that midrange and tweeter speakers have an efficiency 3dB higher than-woofers.

Figure 20 : 3 Way 60W Active Loudspeaker System (V_S = 36V)

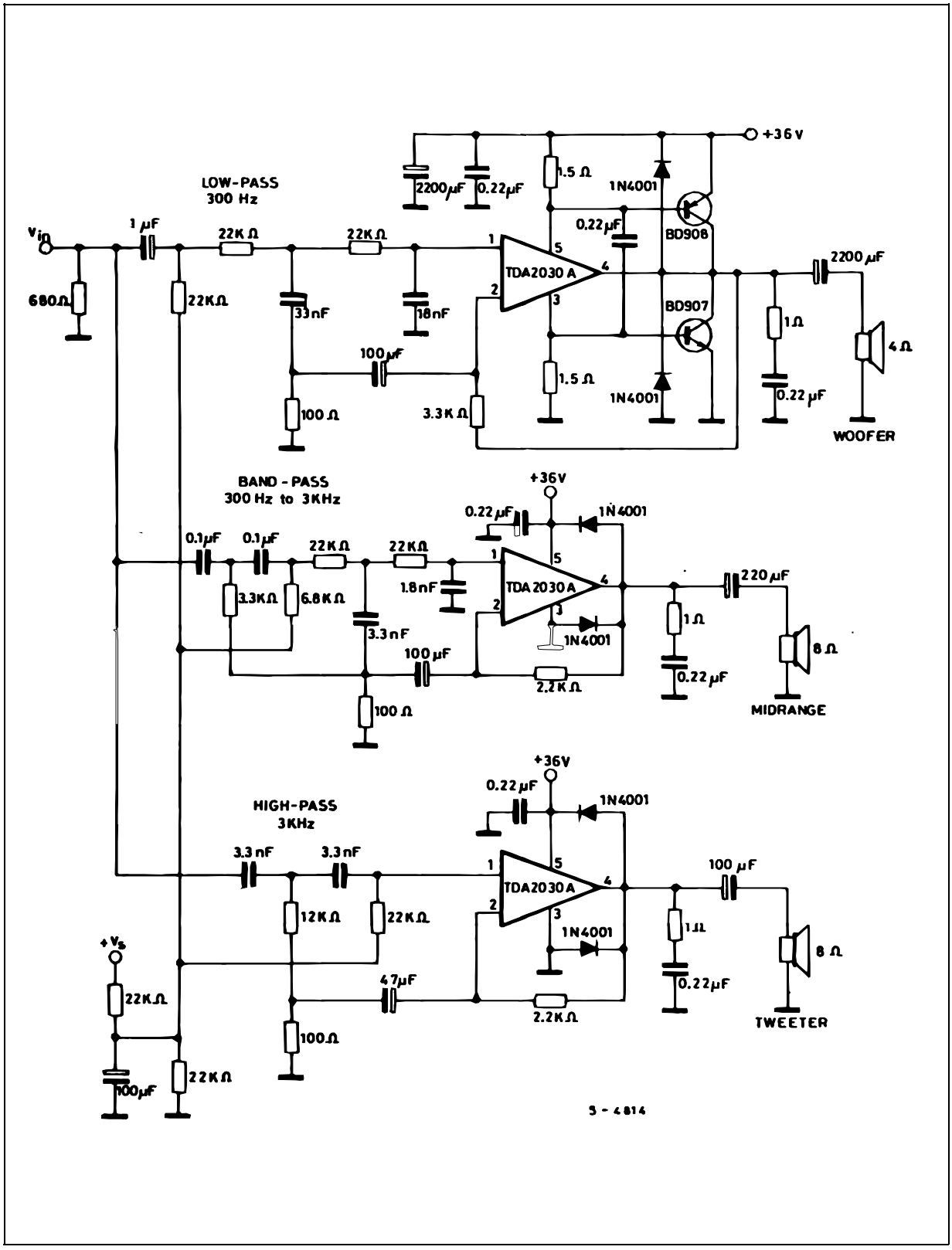

MUSICAL INSTRUMENTS AMPLIFIERS

Another important field of application for active systems is music.
In this area the use of several medium power amplifiers is more convenient than a single high power amplifier, and it is also more realiable.
A typical example (see Figure 21) consist of four amplifiers each driving a low-cost, 12 inch loudspeaker. This application can supply 80 to 160W_{RMS}.

Figure 21 : High Power Active Box for Musical Instrument

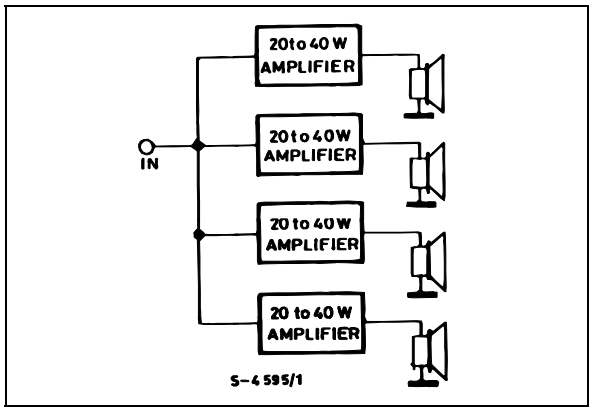

TRANSIENT INTERMODULATION DISTORTION (TIM)

Transient intermodulation distortion is an unfortunate phenomen associated with negative-feedback amplifiers. When a feedback amplifier receives an input signal which rises very steeply, i.e. contains high-frequency components, the feedback can arrive too late so that the amplifiers overloads and a burst of intermodulation distortion will be produced as in Figure 22. Since transients occur frequently in music this obviously a problem for the designer of audio amplifiers. Unfortunately, heavy negative feedback is frequency used to reduce the total harmonic distortion of an amplifier, which tends to aggravate the transient intermodulation (TIM situation. The best known method for the measurement of TIM consists of feeding sine waves superimposed onto square waves, into the amplifier under test. The output spectrum is then examined using a spectrum analyser and compared to the input. This method suffers from serious disadvantages : the accuracy is limited, the measurement is a rather delicate operation and an expensive spectrum analyser is essential. A new approach (see Technical Note 143) applied by SGS-THOMSON to monolithic amplifiers measurement is fast cheap-it requires nothing more sophisticated than an oscilloscope - and sensitive - and it can be used down to the values as low as 0.002% in high power amplifiers.

Figure 22 : Overshoot Phenomenon in Feedback Amplifiers

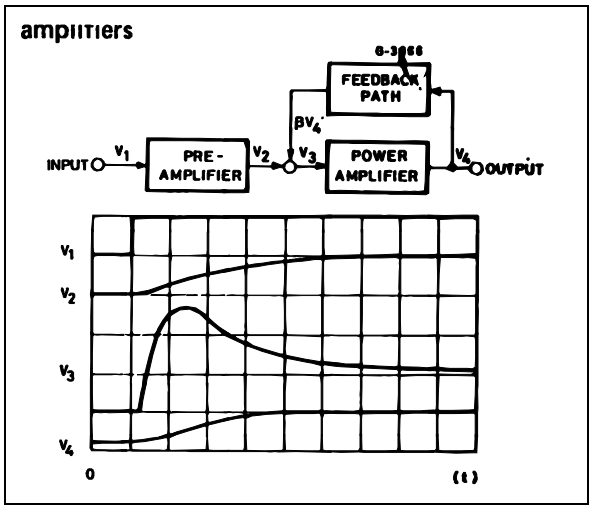

The "inverting-sawtooh" method of measurement is based on the response of an amplifier to a 20kHz sawtooth waveform. The amplifier has no difficulty following the slow ramp but it cannot follow the fast edge. The output will follow the upper line in Figure 23 cutting of the shaded area and thus increasing the mean level. If this output signal is filtered to remove the sawtooth, direct voltage remains which indicates the amount of TIM distortion, although it is difficult to measure because it is indistinguishable from the DC offset of the amplifier. This problem is neatly avoided in the IS-TIM method by periodically inverting the sawtooth waveform at a low audio frequency as shown in Figure 24.

Figure 23 : 20kHz Sawtooth Waveform

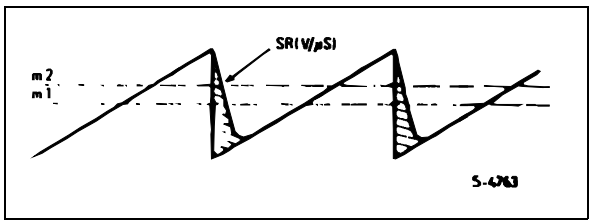

Figure 24 : Inverting Sawtooth Waveform

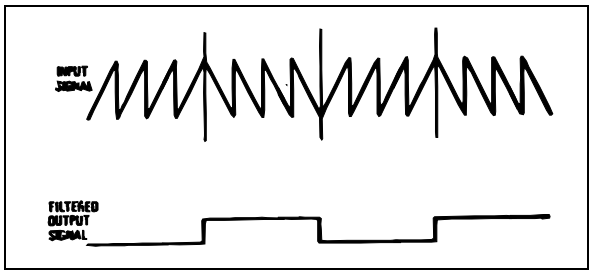

In the case of the sawtooth in Figure 25 the mean level was increased by the TIM distortion, for a sawtooth in the other direction the opposite is true.

The result is an AC signal at the output whole peak-to-peak value is the TIM voltage, which can be measured easily with an oscilloscope. If the peak-to-peak value of the signal and the peak-to-peak of the inverting sawtooth are measured, the TIM can be found very simply from:

$$TIM = \frac{V_{OUT}}{V_{sawtooth}} \cdot 100$$

In Figure 25 the experimental results are shown for the 30W amplifier using the TDA2030A as a driver and a low-cost complementary pair. A simple RC filter on the input of the amplifier to limit the maximum signal slope (SS) is an effective way to reduce TIM.

Figure 25 : TIM Distortion versus Output Power

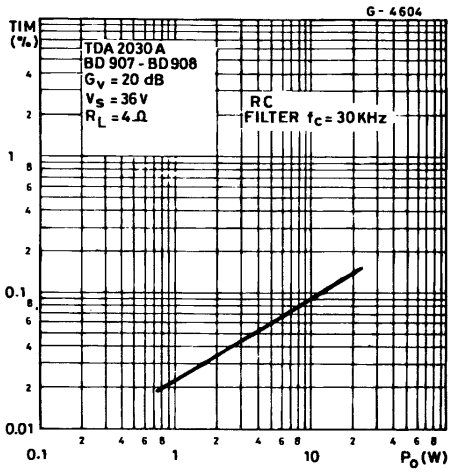

The diagram of Figure 26 originated by SGS-THOMSON can be used to find the Slew-Rate (SR) required for a given output power or voltage and a TIM design target.

For example if an anti-TIM filter with a cutoff at 30kHz is used and the max. peak-to-peak output voltage is 20V then, referring to the diagram, a Slew-Rate of 6V/µs is necessary for 0.1% TIM.

As shown Slew-Rates of above 10V/µs do not contribute to a further reduction in TIM.

Slew-Rates of 100/µs are not only useless but also a disadvantage in Hi-Fi audio amplifiers because they tend to turn the amplifier into a radio receiver.

Figure 26 : TIM Design Diagram (f_C = 30kHz)

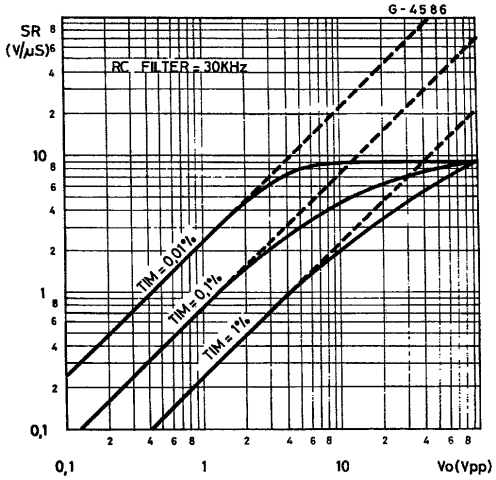

POWER SUPPLY

Using monolithic audio amplifier with non-regulated supply voltage it is important to design the power supply correctly. In any working case it must provide a supply voltage less than the maximum value fixed by the IC break-down voltage.

It is essential to take into account all the working conditions, in particular mains fluctuations and supply voltage variations with and without load. The TDA2030A ($V_{S\,max}$ = 44V) is particularly suitable for substitution of the standard IC power amplifiers (with $V_{S\,max}$ = 36V) for more reliable applications.

An example, using a simple full-wave rectifier followed by a capacitor filter, is shown in the table 1 and in the diagram of Figure 27.

Figure 27 : DC Characteristics of 50W Non-regulated Supply

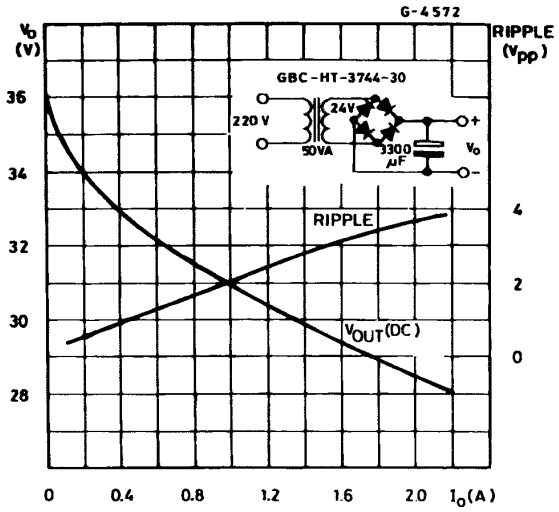

Table 1

Mains (220V)	Secondary Voltage	DC Output Voltage (V_O)		
		$I_O = 0$	$I_O = 0.1A$	$I_O = 1A$
+ 20%	28.8V	43.2V	42V	37.5V
+ 15%	27.6V	41.4V	40.3V	35.8V
+ 10%	26.4V	39.6V	38.5V	34.2V
–	24V	36.2V	35V	31V
– 10%	21.6V	32.4V	31.5V	27.8V
– 15%	20.4V	30.6V	29.8V	26V
– 20%	19.2V	28.8V	28V	24.3V

A regulated supply is not usually used for the power output stages because of its dimensioning must be done taking into account the power to supply in the signal peaks. They are only a small percentage of the total music signal, with consequently large overdimensioning of the circuit.

Even if with a regulated supply higher output power can be obtained (V_S is constant in all working conditions), the additional cost and power dissipation do not usually justify its use. Using non-regulated supplies, there are fewer designe restriction. In fact, when signal peaks are present, the capacitor filter acts as a flywheel supplying the required energy.

In average conditions, the continuous power supplied is lower. The music power/continuous power ratio is greater in this case than for the case of regulated supplied, with space saving and cost reduction.

APPLICATION SUGGESTION

The recommended values of the components are those shown on application circuit of Figure 14. Different values can be used. The Table 2 can help the designer.

SHORT CIRCUIT PROTECTION

The TDA2030A has an original circuit which limits the current of the output transistors. This function can be considered as being peak power limiting rather than simple current limiting. It reduces the possibility that the device gets damaged during an accidental short circuit from AC output to ground.

THERMAL SHUT-DOWN

The presence of a thermal limiting circuit offers the following advantages:

1. An overload on the output (even if it is permanent), or an above limit ambient temperature can be easily supported since the T_j cannot be higher than 150°C.
2. The heatsink can have a smaller factor of safety compared with that of a conventional circuit. There is no possibility of device damage due to high junction temperature. If for any reason, the junction temperature increases up to 150°C, the thermal shut-down simply reduces the power dissipation and the current consumption.

Table 2

Comp.	Recom. Value	Purpose	Larger than Recommended Value	Smaller than Recommended Value
R1	22kΩ	Closed loop gain setting	Increase of gain	Decrease of gain
R2	680Ω	Closed loop gain setting	Decrease of gain (*)	Increase of gain
R3	22kΩ	Non inverting input biasing	Increase of input impedance	Decrease of input impedance
R4	1Ω	Frequency Stability	Danger of oscillation at high frequencies with inductive loads	
R5	≅ 3 R2	Upper Frequency Cut-off	Poor High Frequencies Attenuation	Danger of Oscillation
C1	1µF	Input DC Decoupling		Increase of low frequencies cut-off
C2	22µF	Inverting DC Decoupling		Increase of low frequencies cut-off
C3, C4	0.1µF	Supply Voltage Bypass		Danger of Oscillation
C5, C6	100µF	Supply Voltage Bypass		Danger of Oscillation
C7	0.22µF	Frequency Stability		Larger Bandwidth
C8	$\approx \frac{1}{2\pi BR1}$	Upper Frequency Cut-off	Smaller Bandwidth	Larger Bandwidth
D1, D2	1N4001	To protect the device against output voltage spikes		

(*) The value of closed loop gain must be higher than 24dB.

DIM.	mm			inch		
	MIN.	TYP.	MAX.	MIN.	TYP.	MAX.
A			4.8			0.189
C			1.37			0.054
D	2.4		2.8	0.094		0.110
D1	1.2		1.35	0.047		0.053
E	0.35		0.55	0.014		0.022
E1	0.76		1.19	0.030		0.047
F	0.8		1.05	0.031		0.041
F1	1.0		1.4	0.039		0.055
G	3.2	3.4	3.6	0.126	0.134	0.142
G1	6.6	6.8	7.0	0.260	0.268	0.276
H2			10.4			0.409
H3	10.05		10.4	0.396		0.409
L	17.55	17.85	18.15	0.691	0.703	0.715
L1	15.55	15.75	15.95	0.612	0.620	0.628
L2	21.2	21.4	21.6	0.831	0.843	0.850
L3	22.3	22.5	22.7	0.878	0.886	0.894
L4			1.29			0.051
L5	2.6		3.0	0.102		0.118
L6	15.1		15.8	0.594		0.622
L7	6.0		6.6	0.236		0.260
L9	2.1		2.7	0.008		0.106
L10	4.3		4.8	0.17		0.189
M	4.23	4.5	4.75	0.167	0.178	0.187
M1	3.75	4.0	4.25	0.148	0.157	0.167
V4	40° (typ.)					
V5	90° (typ.)					
Dia	3.65		3.85	0.144		0.152

OUTLINE AND MECHANICAL DATA

Weight: 2.00gr

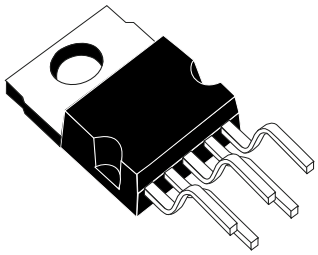

Pentawatt V

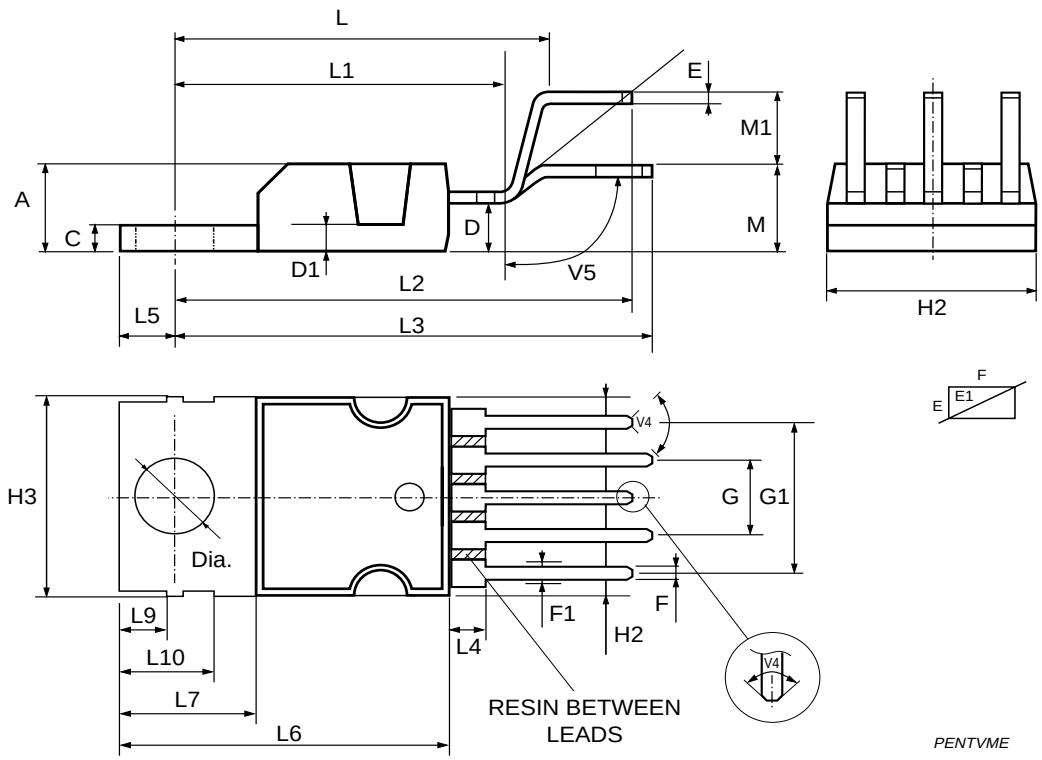

Information furnished is believed to be accurate and reliable. However, STMicroelectronics assumes no responsibility for the consequences of use of such information nor for any infringement of patents or other rights of third parties which may result from its use. No license is granted by implication or otherwise under any patent or patent rights of STMicroelectronics. Specification mentioned in this publication are subject to change without notice. This publication supersedes and replaces all information previously supplied. STMicroelectronics products are not authorized for use as critical components in life support devices or systems without express written approval of STMicroelectronics.

The ST logo is a registered trademark of STMicroelectronics
PENTAWATT® is a Registered Trademark of STMicroelectronics
© 2000 STMicroelectronics – Printed in Italy – All Rights Reserved

STMicroelectronics GROUP OF COMPANIES
Australia - Brazil - China - Finland - France - Germany - Hong Kong - India - Italy - Japan - Malaysia - Malta - Morocco - Singapore - Spain - Sweden - Switzerland - United Kingdom - U.S.A.
http://www.st.com